FINAL YEAR PROJECT

University of Narowal

Smart Flood Monitoring And Alarming System

SUBMITTED BY:

Muhammad Faizan	**20-UON-1328**
M Hur Abbas	**20-UON-1321**

BS COMPUTER SCIENCE (SESSION 2020-2024)

SUPERVISED BY: **Mr. Zishan Zafar**

© Computer Science Department

In the name of God, the merciful and compassionate.

© Computer Science Department

FACULTY OF COMPUTING AND INFORMATION TECHNOLOGY

DEPARTMENT OF COMPUTER SCIENCE

UNIVERSITY OF NAROWAL

Circular Road, Narowal, Punjab, Pakistan

STATEMENT OF SUBMISSION

This is certify that **Muhammad Faizan** Registration No. **(20-UON-1328), M Hur Abbas** Registration No. **(20-UON-1321)** successfully completed the final year project named as: **Smart Flood Monitoring And Alarming System** at the Department of Computer Science, University of Narowal, to fulfill the requirement of the degree of **BS in Computer Science**.

Prof. Zishan Zafar	Prof. Zaeen Nazir
Project Supervisor	Project Management Office
Dr. Naveed Yasir	Prof. Adnan Waheed
External Examiner	Coordinator

© Computer Science Department

ACKNOWLEDGEMENT

With the blessings of Almighty Allah and the prayers of our parents, we have made this humble attempt to achieve the goal that was set for us at the beginning of this project. Although it was not an easy task, the research work embodied in this dissertation was accomplished under the able guidance and affectionate supervision of **Mr. Zishan Zafar, Incharge of Computer Science & IT Department,. University of Narowal, Narowal.**

We are grateful for the support, guidance and cooperation of **Zishan Zafar** without whom this project and research report would not have been possible. His continuous support and guidance helped us to work into and complete it. We are honored to acknowledge his support.

ABSTRACT

The **"Smart Flood Monitoring and Alarming System Using IoT"** project is designed to enhance flood management using Internet of Things (IoT) technology. The system involves deploying a network of sensors in flood-prone areas to monitor critical environmental factors such as water levels, rainfall intensity, and soil moisture. These sensors continuously collect real-time data and transmit it wirelessly to a central processing unit.At the heart of the system is a data analysis component that uses advanced algorithms to assess the collected information and predict potential flooding events. By analyzing patterns in the data, the system can detect early signs of flooding and evaluate the risk level associated with these signs. When the system identifies conditions that suggest a flood is imminent, it automatically triggers alerts and notifications.These alerts are sent to local authorities and residents through various communication channels, including mobile apps and SMS. This ensures that crucial information is delivered quickly and effectively, enabling prompt responses to potential flood threats. The use of wireless technology for data transmission further supports the timely and reliable dissemination of information.The smart flood monitoring and alarming system aims to improve flood preparedness and response. By providing early warnings and facilitating faster emergency actions, the system helps to reduce the impact of flooding on communities and enhance overall safety during flood events.

© Computer Science Department

Contents

STATEMENT OF SUBMISSION iii

ACKNOWLEDGEMENT iv

ABSTRACT iv

Chapter#1 1

INTRODUCTION 1

1.3 Problem Objectives 3

1.4 Need Analysis 3

1.5 Project Outcomes and Deliverables 3

1.6 Assumptions and Constraints 5

Constraints: 6

Chapter#2 6

REQUIREMENT ANALYSIS 6

2.1 Introduction 6

2.3 Installation and Setup 7

1. Plan 7

2. Get Components 7

4. Set Up Software 8

5. Connect Alarms 8

6. Deploy and Monitor 8

7. Maintain 8

2.4 Data Collection 8

2.5 Parameter Measurement 9

2.6 Data Logging and Storage: 9

2.7 Power Supply and Maintenance 9

2.8 Integration with Software Systems 9

2.9 Benefits and Applications 9

2.10 Conclusion 10

2.11 Literature Survey 10

© Computer Science Department

2.12 Equipment's Requirements 11
2.12.1 All Required Equipment's: 11
2.12.2 Arduino Uno 12
2.12.3 Temperature/Humidity Sensor: 13
2.12.4 Rain Sensor: 14
2.12.5 4Channel Relay Module: 14
2.12.5 Power Supply: 15
2.13 Functional Requirements for Smart Flood Monitoring 18
- Data Transmission 18
- Data Processing and Analysis 18
- Alerting and Notification 18
- System Management 18
- Security and Privacy 18

2.14 Non- Functional Requirements for Smart Flood Monitoring 18
2.15 Cost Analysis 18
2.16 Risk Analysis 18
Chapter#3 20
Circuit Diagram 20
3.1 Overview 20
This chapter elaborates on the different parts that were used in the construction of the flood monitoring system as well as their integration. The system Makeup has been developed using Arduino Uno board together with several sensors to measure flood information. This chapter focuses on the development and a real life application of the Smart Flood Monitoring and Alarming System such as the Arduino microcontroller,Ultrasonic Sensor, Ardunio Uno, Temperature/Humidity Sensor, Rain Sensor, 4Channel Rely Module,Power Supply, LED 20
3.2 System Components 20
3.3 Circuit Diagram and Connections 21
3.5 Working Principles 23

© Computer Science Department

3.6 Coding the Arduino 24
3.7 Safety Considerations 30
3.8 Conclusion 30
Chapter#4 31
INTERFACE 31
4.1 Introduction 31
4.4 Blynk Monitoring Interface 32
4.5 Overview of the Interface 33
4.6 Detailed Interface Description 33
Chapter#5 35
APPENDIX A:REFERENCES 37

© Computer Science Department

Chapter#1

INTRODUCTION

One type of natural disaster is flooding, which has the potential of causing a lot of damage and create a feeling of danger in various societies. In the past, floods were observed by conducting visual checks and using conventional tools, which is sometimes time-consuming and not very efficient. In order to address these problems, the "Smart Flood Monitoring and Alarming System"project employs the Internet of Things (IoT) approach to improve the management of floods . This project requires installation of smart sensors on the areas that are prone to flooding. Such sensors include those that measure content like the volume of water, the amount of rainfall, and the moisture content of the soils. The sensors then transmit this information through wireless links to a processing system of the data. The central system, therefore, employs sophisticated interfaces and formulas in making a determination on whether or not a flood could occur. If it senses that a flood is approaching, it does what any good public announcer would do – it issues warning and alerts. These alerts are sent to mayors and citizens living in the regions, via mobile applications and other means so they receive the alert.

1.1 Project Overview

This project will focus on enhancing the techniques used in managing and handling floods through using advanced technology. This system can be used to provide early alert and precise forecast about floods to mitigate impact, protect lives and enhance responses.

System Components:

This strategy entails several major components. Firstly, smart sensors are installed in places, which are most vulnerable to water flooding. These sensors include measuring what you need, such as depths of water, how it is raining, and how moist the ground is. They work at once to gather data in real-time. These sensors transmit information through the use of wireless signals to the main network system. This central system ingests the data and analyzes it with the help of sophisticated software and programs to determine and forecast floods. If the system proposes that the event flood is likely to occur, that flood will produce alerts and warnings as if it is already taking place.

Key Features:

© Computer Science Department

Possible, one of the most important characteristics of the system is real-time, it implies that the system is actively gathering updated information about the environment. The data analysis part makes use of smart technology to determine the possibility and the specific area that an incidence of a flood may occur. In case a flood is predicted, the alarms are immediately raised amongst the local officials, rescue teams and inhabitants through the use of portable applications and textual messages.

Benefits:

These are the advantages of this smart system. It gives warnings and prevents people and the authorities from being caught off guard if a flood is coming. It also facilitates increase of safety in the process since it provides relevant information that is up-to-date. Moreover, it hastens the responses to calamities since it triggers alerts immediately while also improving the flood management, regarding detailed and timely information.

Impact:

In brief, this project tries to enhance the efficiency of the flood management task by employment of IoT technology. Through early warning and enhancing the accuracy of the flood forecast the system assists in the safeguarding of lives and property from flood disasters.

1.2 Problem Definition

Flood is one of the biggest threats as it involves the danger of damaging homes, buildings, and in some cases – lives. The traditional ways of flood monitoring for instance conducting frequent checks and the use of fixed gauges are inconsequential and can sometimes fail to adequately alarm people of floods that may be imminent.

The issue in its utilization is that these conventional systems do not allow dissemination of timely data or precise forecasts of floods. A notable outcome of this process is that floods are not responded to in time and communities remain unprotected.

That is why we require a new system which should be based on the fundamental of Internet of Things (IoT) technologies to measue the parameters such as water level and rainfall — constantly. This system should be capable of forecasting floods and give early warnings to the people and the government once there is a possibility of flooding.

© Computer Science Department

1.3 Problem Objectives

1. **Real-Time Monitoring:** Ensure that there is constant monitoring of the state of the environment this includes the water levels, rainfall and soil moisture levels to mention but a few; this will ensure that a up-to-date information on the state of the environment is obtained.
2. **Accurate Prediction:** Create score cards and indices that quantify and estimate risk levels based on actual data depending on likely floods.
3. **Timely Alerts:** Design a notification mechanism that immediately informs the local directors and residents that a flood is close by.
4. **Enhanced Preparedness:** The following are the objectives of the study: To enhance community and emergency response preparedness using timely and accurate flood information.
5. **Efficient Data Transmission:** In this respect, the objective is to guarantee quick and dependable delivery of the data collected by the sensors to a central system for efficient processing.

1.4 Need Analysis

Flood events triggered due to climate change effects and increase in urbanization and the conventional flood monitor system may prove to be slow and inadequate. Well, other systems such as checks, and fixed gauges are not efficient as they take a long time to produce up-to-date data necessary in managing floods. Based on these issues, the need for a system that gives constant and accurate information on status and quick alerts is apparent. Members of the emergency response team and other local authorities require information to enable them to respond to floods as fast as possible. The conventional approaches are unlikely to provide such real-time information or reliable forecast. Such problems can be solved by an IoT-based system which will give an opportunity to analyses water level and rainfall data and forecast floods more effectively due to the application of the modern technologies. Such a system can also send quick messages to notify people and the relevant stakeholders, about the unfolding calamity to prepare and act swifter. It shall be comprehensive to address the different areas and convenient with arguably great mobile applications and means of communication. These needs will be met by the smart flood monitoring system and consequently flood management will be boosted, the safety of the people in the communities will be improved, and the amount of flood damages prevented.

1.5 Project Outcomes and Deliverables

1.5.1 Project Outcomes:

© Computer Science Department

1. **Better Flood Prediction and Monitoring**
   - **Outcome**: Smart sensors to monitor the water levels in real-time as well as rainfall and soil moisture.
   - **Benefit**: Helps give the right information from time to time to help forecast floods much better.
2. **Faster Emergency Response**
   - **Outcome**: Suspected flood alerts that are provided to local authorities, emergency services, and the public on the same note.
   - **Benefit**: Permits prompt actions for minimising the effects of floods and enhancing the level of safety.
3. **Increased Community Readiness**
   - **Outcome**: Availability of flood information in the palm through the use of mobile applications and other media.
   - **Benefit**: Assists people and officials in improving the preparation for instances of floods.
4. **Informed Decision Making**
   - **Outcome**: Employment of reliable statistical tools to forecast and thereby mitigate the impacts of flooding.
   - **Benefit**: It is useful for comprehensive and wise flood decisions and planning.
5. **Flexible and Scalable System**
   - **Outcome**: An infrastructure that can be added to and will interconnect as an already existed system.
   - **Benefit**: For this reason, it can adapt well to different areas and the change in the condition of the floods.

1.5.2 Project Deliverables:

1. **Sensor Network**
   - **Deliverable**: Wireless stations for measuring water in rainwater tank, rainfall, and moisture in the soil.
   - **Description**: Offers current information concerning the state of flood.
2. **Central Processing Unit**
   - **Deliverable**: Acquisition and analysis system of data from the sensors.
   - **Description**: It operates on the collected data to estimate the flood risks.
3. **Alert System**
   - **Deliverable**: Notifications which, when a risk of flooding is identified, are immediately issued to the corresponding persons.

© Computer Science Department

- **Description**: Measures that can be incorporated are use of mobile application alerts and text message alerts.

4. **Mobile App**
   - Deliverable: An app that is designed to deliver both flood status information and flood alert messages. Description: Enables users to receive timely information and phone calls.
5. **Analytics Dashboard**
   - **Deliverable**: A visual tool for viewing flood data and predictions.
   - **Description**: Helps understand flood patterns and plan responses.
6. **Documentation and Training**
   - **Deliverable**: Manuals and training for users.
   - **Description**: Provides instructions on how to use the system effectively.

These outcomes and deliverables aim to improve flood management, enhance safety, and support effective responses to flooding.

1.6 Assumptions and Constraints

Smart Flood monitoring And Alarming System follows some of these assumptions and constraints ,if they are followed then System would give best result.

Assumptions:

1. **Available Sensors**: We assume we can get reliable flood sensors like water level and rain gauges.
2. **Network Connection**: We assume there will be good network coverage (cellular, Wi-Fi) where the system is installed.
3. **Power Supply**: We assume there will be a stable power source or that sensors will have long-lasting batteries.
4. **Data Transmission**: We assume the sensors can send data to a central server without major issues.
5. **Alerts**: We assume we can set up effective alerts (like SMS or email) for flood warnings.
6. **Scalability**: We assume the system can be expanded easily with more sensors if needed.
7. **User Access**: We assume users will be able to access the system via web or mobile apps.
8. **Weather Measurement:** On the case of weather, we suppose that sensors used can capture the changes in the state of weather independently of the actual state.

© Computer Science Department

9. **Regulations**: It can be safely assumed, that the system in to compliance with local rules and standards.

Constraints:

1. **Budget**: Another challenge is Constraints within the project's budget, which can further dictate the quality and kind of equipment to procure.
2. **Technical Skills:** It is comprehensible that the construction and continuation of the system presupposes profound adequate knowledge.
3. **Durability**: Weather and condition should be tolerated by the sensors.
4. **Data Security: Since the data can be accessed from anyone we have to ensure that the data i**s secured appropriately.
5. **Maintenance**: The structure of the layout of the system should be fully manageable as well as dependable.
6. **Deployment Location:** Some of the limitations may include; Difficulty when it comes to installing and maintaining the system especially in remote regions.
7. **Data Delay**: It could slow down the capability of sending and/or receiving data.
8. **Regulations**: They have to adhere to such laws and regulations as apply to the system.
9. **User Training:** Training to the users is required to ensure that they are fully conversant with the operational procedures of the system.
10. **Integration**: It is also important to notice that the new system may have to interface with other flood management instruments which may be intricate.

Chapter#2

REQUIREMENT ANALYSIS

2.1 Introduction

- Explain various hardware and software necessities of the proposed system "**Smart Flood Monitoring and Alarming System.** "
- Emphasize that it is all about saving people's lives is about from the given movie clip,oriented. Preparing the public on the conditions that lead to floods enables them to avoid areas that are prone to floods during the occurrence of floods.

2.2 Hardware Components

© Computer Science Department

1. **Water Level Sensor:** Determines the level of water so that one can know when the level is rising. Kinds include ultrasonic sensor, capacitive sensor, and float sensor.
2. **Rain Fall Sensor:** It determines the number of rainfall or how frequent it rains. They can be of the tipping bucket type, or an optical rain gauge.
3. **Temperature and Humidity Sensor:** Keyword: Tracks conditions that can influence flooding –rainfall or temperature. Some of them are the DHT22 or BME280.
4. **Arduino**: A popular choice for prototyping, with various models like the Arduino Uno.
5. **ESP8266**: These microcontrollers offer built-in Wi-Fi capabilities, which are useful for IoT applications.
6. **Wi-Fi Module**: For wireless communication. The ESP8266 or ESP32 often has built-in Wi-Fi.
7. **Buzzer**: For audible alarms to alert users of rising water levels.
8. **LCD**: For local display of sensor data and status information.
9. **Cellular Module**: For remote locations where Wi-Fi might not be available. Examples include GSM/3G/4G/LTE modules.
10. **PowerBoost 1000 Basic**: Connect the PowerBoost module to ensure a stable power supply for the Arduino and other components.

2.3 Installation and Setup

1. Plan

- **Decide** what sensors and alerts you need.
- **Choose** where to place them.

2. Get Components

- **Sensors**: Water level, rain fall, temp/humidity.
- **Microcontroller**: Arduino, ESP8266
- **Communication**: Wi-Fi Modules
- **Alarm**: Buzzer and LEDs.

© Computer Science Department

3. Install Hardware

- **Sensors**: Mount in chosen locations.
- **Microcontroller**: Place in the weatherproof case and connect sensors.
- **Communication Module**: Attach for data transmission.
- **Power Supply**: Connect batteries or solar.

4. Set Up Software

- **Program** the microcontroller to read data and send alerts.
- **Test** everything to make sure it works.

5. Connect Alarms

- **Add** buzzer and LEDs to notify of high water levels.

6. Deploy and Monitor

- **Install** sensors and check system regularly.

7. Maintain

- **Inspect** and update as needed.

2.4 Data Collection

Continuous Monitoring:

- **Real-Time Data**: Sensors continuously monitor environmental parameters and provide real-time data.
- **Sampling Interval**: Data is collected at regular intervals (e.g., every minute or every hour), depending on the sensor's capability and the system's requirements.

Data Types:

- **Water Level Data**: Tracks the height of water bodies.
- **Rainfall Data**: Measures precipitation amounts.
- **Weather Data**: Includes temperature, humidity.

© Computer Science Department

2.5 Parameter Measurement

- **Water Level**: Measures water height using ultrasonic sensors.
- **Rainfall**: Measures rainfall with tipping bucket and optical gauges.
- **Weather Conditions**: Monitors temperature, humidity, wind speed, and air pressure.

2.6 Data Logging and Storage:

- Explain how the collected data is logged and stored for further analysis.
- The system does not require extensive data logging. However, the Arduino can be programmed to log command responses and system status to the serial monitor for debugging purposes.

2.7 Power Supply and Maintenance

- Describe the power supply requirements of the "**Flood monitoring"** hardware.
- Checking connections.
- Ensuring the firmware is updated.
- Replacing components if they show signs of wear.

2.8 Integration with Software Systems

- Set up the ESP8266 to connect to the "**Flood Monitoring System"** WiFi network.
- Configure the to recognize specific commands and link them to the ESP8266's IP address.
- Use HTTP or MQTT protocols for communication between the "**Flood Monitoring System"** and the Arduino.

2.9 Benefits and Applications

Benefits:

- Real-Time Monitoring and Alerts
- Enhanced Accuracy and Reliability

© Computer Science Department

- Efficient Resource Management
- Scalability and Flexibility
- Cost-Effectiveness

Applications:

- Urban Flood Management
- Agricultural and Rural Areas
- Disaster Preparedness and Response
- Infrastructure Protection
- Insurance and Risk Management

2.10 Conclusion

Integrating IoT into smart flood monitoring systems significantly improves flood management. It enables **real-time updates** on water levels and weather conditions, enhances **accuracy** in predicting flood risks, and ensures **efficient use of resources** during emergencies.

These systems benefit cities, rural areas, disaster response, environmental protection, infrastructure safety, and insurance. They help manage urban flooding, support rural flood preparation, coordinate emergency actions, monitor environmental impacts, protect infrastructure, and improve flood risk assessments and claims.

2.11 Literature Survey

Recent advancements in IoT technology have greatly improved flood monitoring systems. New and better sensors can now more accurately measure water levels, rainfall, and soil moisture.

There is upgraded communication that include LoRa and 5G that offer real-time data communication effectively. It ensures that the prediction of flood is done with high accuracy through usage of machine learning in relation to big data.

These systems help in many ways: they handle floods in urban areas better, help in follow farmers and other rural areas in situations of floods, and are quick to alert in disasters. They also monitor environmental impacts, far more physical structures and enhance the insurance management.

But there are difficulties: data has to be protected, one has to guarantee that system can grow and perform well in conditions which can be rather severe. In total, IoT enables the enhancement of flood management processes and increases people’s safety in the community.

© Computer Science Department

2.12 Equipment's Requirements

2.12.1 All Required Equipment's:

- Ultrasonic Sensor
- Ardunio Uno
- Temperature/Humidity Sensor
- Rain Sensor
- 4Channel Rely Module
- Power Supply
- LED
- LED Indicators

2.12.1 Ultrasonic Sensor

An ultrasonic sensor is a device that uses ultrasonic sound waves to determine the distance to an object. Ultrasonic sensors are able to detect objects in close proximity by means of ultrasonic pulses that are sent and received by the transducer in the device.Depending on the surface, high-frequency sound waves will produce varying echo patterns. In order to function, ultrasonic sensors release a wave of sound at a frequency that can be heard by humans but not by other animals. A transducer on the sensor acts like a microphone, picking up and sending out ultrasonic waves.A device that can measure the distance to an item using ultrasonic sound waves is one definition of an ultrasonic sensor. Ultrasonic sensors are able to detect objects in close proximity by means of ultrasonic pulses that are sent and received by the transducer in the device.Depending on the surface, high-frequency sound waves will produce varying echo patterns. In order to function, ultrasonic sensors release a wave of sound at a frequency that can be heard by humans but not by other animals. A transducer on the sensor acts like a microphone, picking up and sending out ultrasonic waves.

© Computer Science Department

Fig 1: Ultrasonic Sensor

2.12.2 Arduino Uno

A microcontroller known as an actual mini-board is the Arduino Uno. It has both analog and digital pins, among other kinds of pins. Six analog and 14 digital pins are present. It typically requires 7 to 12 volts of power to operate via a USB cord. The inputs and outputs on Arduino microcontrollers can be used to gather data and produce outputs in reaction to that data. The Hypertext Transfer Protocol (HTTP) allows Arduino microcontrollers to transmit and receive data via the internet. The Esp board is a basic microcontroller that can connect to the internet. Microcontrollers having Ethernet SPI (ESPI) can be linked to or operate as WiFi servers.

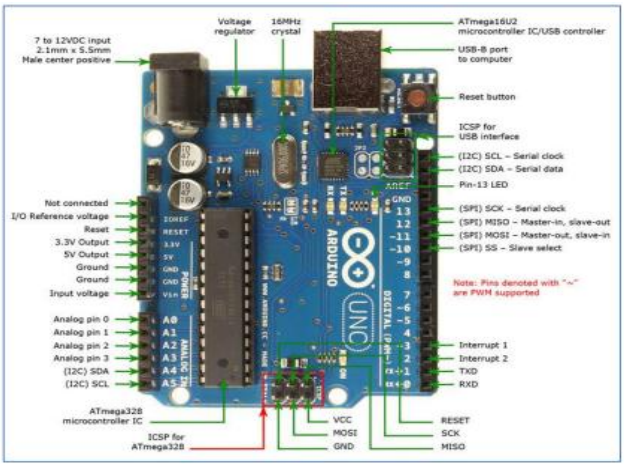

© Computer Science Department

Fig 2: Arduino Uno

.

2.12.3 Temperature/Humidity Sensor:

The waterproof DS18820 temperature sensor probe is pre-wired, sealed, and one meter long. It is based on the DS18B20 sensor. It comes in handy while taking measurements of distant objects or in rainy conditions. Because they are digital, their signal quality remains same regardless of how far away you are. The DS18B20 temperature sensors are waterproof and feature an integrated digital-to-analog converter. They are 1-wire compatible, which allows them to measure temperature with up to 12 bits of precision and a reasonable degree of accuracy (±0.5°C) throughout a significant percentage of their range. They are compatible with nearly all microcontrollers that have a single digital pin, and you can even connect many of them to a single pin because they all have unique 64-bit identifiers. Their reliance on the Dallas 1-Wire protocol is the one drawback; deciphering the protocol's communication takes extensive programming due to its complexity. As a pullup from the DATA to VCC line, a 4-resistor must be connected to the sensor pin when using a microcontroller. There are three connected connections: Black: GND, Yellow/White: DATA, and Red: VCC/VDD.

Humidity and air temperature can be measured and reported by a hygrometer, which is a type of humidity sensor. A temperature-dependent maximum moisture content and the relative humidity of the air are defined as. When trying to choose a comfortable environment, relative humidity becomes a major consideration. A humidity sensor's primary function is to measure the air temperature.

© Computer Science Department

Fig 3: Temperature/Humidity Sensor

2.12.4 Rain Sensor:

A rain sensor is a device that is used to assist in measuring precipitation, often rain, and in turn, control or set off certain functions. It works on the basis of rainfall detection, with or without intensity and transmits signals to other appliances or systems. Some uses are in smart gardening mechanisms that halt watering when rain is present, automobile operations that triggers the wipers when it rains, smart homes that alters movements in line with weather including closing windows or retracting awnings, and in meteorological instruments that records rain density and frequency for predictions. Opening the curtain of the actuality of rain, rain sensors secure automatization of the reaction regarding weather circumstances in diverse spheres, thus saving resources.

.

Fig 4: Rain Sensor

2.12.5 4Channel Relay Module:

A 4-Channel Relay module is an operating tool that enables one to control high voltage loads using a microcontroller for instance an Arduino or ESP module. It works by establishing its input pins to receive low voltage control signals from the microcontroller, which opens the internally

© Computer Science Department

built electromechanical switches (relays). These switches break the circuits to make the current to flow through the on connected high voltage devices thus switching them on or off. It normally uses a power supply of 5V or 12V and there is a electric isolation between the low voltage control signals and the high voltage output to safe the user. These are VCC for the supply voltage, GND for the ground and IN1-IN4 for the Microcontroller signals to the motor. The relay terminals are particularly identified as common terminal (COM), normally open NO and normally closed NC that contacts the devices being switched. Integrated into the context of your final year project, this module allows for automation or remote control of several high voltage devises through appropriate stimulation in your microcontroller; thus the necessity for any project that requires device automation/remote stimulation.

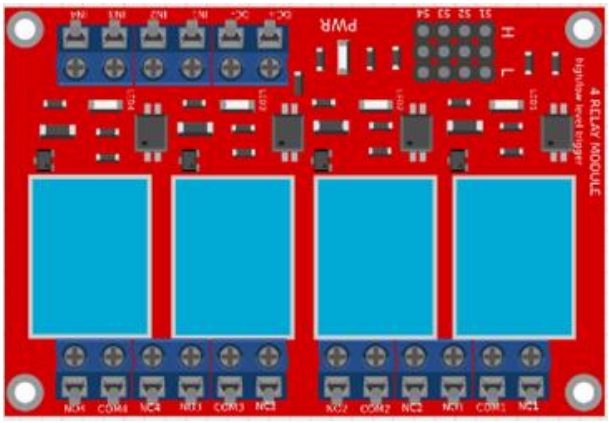

Fig 5.4Channel Relay

2.12.5 Power Supply:

Power supply plays an essential role in any completed project such as Final Year Project (FYP) since it is a source of electrical power to several devices and parts. It works by taking electrical energy from an input source like a wall socket an battery or a Photovoltaic solar panel among other and makes it usable to suit your purpose in the project. Converters include AC to DC converters that convert the power supply delivered in the electricity grid into direct current power necessary for the operation of most electronics or DC to DC converters that alter one DC voltage level to a better one for the devices. In this regard, they are categorized by their output voltage, current carrying capacity as well as the total power rating, thus satisfying the power

© Computer Science Department

demands of all the power elements in your project. For example, if an FYP project of a microcontroller and different sensors is carried out, an appropriate power supply, which should supply the correct voltage and current for those microcontrollers and sensors, would have to be chosen. This ascertains free flow of your project; also safeguards your part from harm due to improper voltage rate.

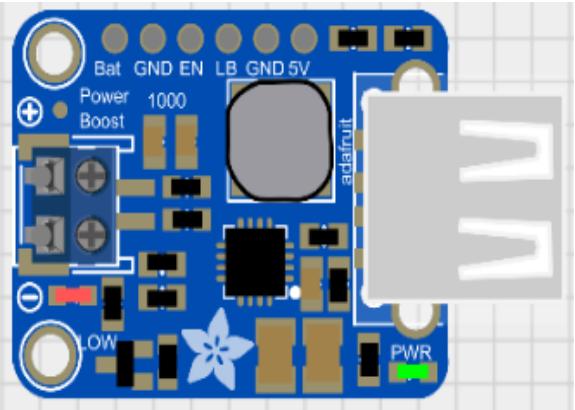

Fig 5:Power Supply

2.12.6 LED

The LiquidCrystal library allows for the operation of an LCD display that is compatible with the Hitachi HD44780 driver. There are a plethora of them, and their 16-pin interface is usually how you can distinguish them. Due to the parallel interface of LCDs, controlling the display requires the microcontroller to activate multiple interface pins at the same time. Listed below are the components that make up the interface:

- By manipulating the register select (RS) pin, you can direct the LCD's memory to store data in a certain location.
- A data register contains the actual data that displays on the screen, while an instruction register instructs the LCD's controller what to do next.
- The R/W pin toggles the device between reading and writing modes. You can write to the registers using the eight data pins (D0-D7) and the enable pin.

© Computer Science Department

- Whenever you write to a register, the bits that are high on these pins represent that action, and when you read from a register, the values that are low on these pins represent that action.

Fig 6: LED

2.12.7 LED Indicators

Three LEDs (red, green, and blue) are used as indicators for different conditions:

- **Red LED:** High water level (potential flood)
- **Green LED:** Normal water level
- **Yellow LED:** Low water level

Fig 7: LED Indicators

© Computer Science Department

2.13 Functional Requirements for Smart Flood Monitoring

- Data Collection
- Data Transmission
- Data Processing and Analysis
- Alerting and Notification
- User Interface
- System Management
- Security and Privacy

2.14 Non- Functional Requirements for Smart Flood Monitoring

- Performance
- Reliability
- Scalability
- Securi
- Usability

2.15 Cost Analysis

An estimate of the total cost of a project is known as a project cost. The first step in developing a project cost estimate is to identify who will be responsible for what within the team and how the project will be broken down into separate tasks. Expenditure on the hardware module accounts for the entirety of our project's budget..

2.16 Risk Analysis

Identifying and managing risks is crucial for the successful completion of the **"Smart Flood Monitoring And Alarming System using IOT"** project. The following are potential risks and their associated mitigation strategies:

Integration Complexity:

© Computer Science Department

- **Risk:** Difficulty in integrating various hardware components (WiFi modules, Arduino, sensors) with the voice control system.
- **Mitigation:** Conduct thorough testing and use reliable libraries and protocols for seamless integration.

Network Reliability:

- **Risk:** Intermittent WiFi connectivity affecting system performance.
- **Mitigation:** Use robust WiFi modules and ensure a strong and stable internet connection.

Hardware Failures:

- **Risk:** Potential failure of hardware components such as sensors, relays, or the Arduino board.
- **Mitigation:** Keep spare parts available and design the system for easy replacement of faulty components.

User Data Privacy:

- **Risk:** Unauthorized access to user data
- **Mitigation:** Implement strong encryption and authentication mechanisms to protect user data.

Power Supply Issues:

- **Risk:** Inconsistent power supply leading to system downtime.
- **Mitigation:** Use reliable power sources and incorporate power backup solutions like Power Boost 1000 Basic.

User Acceptance:

- **Risk:** Users may find the system difficult to use or unreliable.
- **Mitigation:** Conduct user training sessions and gather feedback for continuous improvement.

© Computer Science Department

Chapter#3

Circuit Diagram

3.1 Overview

This chapter elaborates on the different parts that were used in the construction of the flood monitoring system as well as their integration. The system Makeup has been developed using Arduino Uno board together with several sensors to measure flood information. This chapter focuses on the development and a real life application of the Smart Flood Monitoring and Alarming System such as the Arduino microcontroller,Ultrasonic Sensor, Ardunio Uno, Temperature/Humidity Sensor, Rain Sensor, 4Channel Rely Module,Power Supply, LED.

3.2System Components

3.2.1 Arduino Uno

Through the provided diagram, it can be noted that the Arduino Uno is the primary microcontroller board for all the sensors to get processed. It has many I/O digital and analog pins through which it can communicate with the other parts of the board.

3.2.2 Ultrasonic Sensor (HC-SR04)

The ultrasonic sensor identifies the distance of the sensor to the water level in the tank. It consists of two main components: two components an intermediary between them which goes by the name of transmitter and the other component is known as the receiver. The one in the water sends out sound waves with a frequency higher than which human ears can hear, while the other collects the reflected waves off the water surface.

3. 2. 3 Water Flow Sensor

This sensor decides the velocity of the water flow and is vital in determining the pace of the water’s rise. It contains a turbine rotor that begins to rotate when water flows through it and it creates electrical pulses to be counted by the Arduino.

© Computer Science Department

3. 2. 4 Temperature and humidity Sensor

Temp-humidity data is taken using the DHT11 sensor while light data is taken using the MLX90614 sensor. These parameters are important since they can either enhance or hinder the water depth and flood situation.

3. 2. 5 Rain Sensor

It encompasses a rain sensor that identifies the existence of water so as to prove that it is raining. This sensor is used for identification and tracking of flood from early stage of occurrence.

3. 2. 6 LCD Display

Some of the data that is displayed on the, LCD display as real time data from the sensors include water level, flow rate, temperature, humidity.

3. 2. 7 LED Indicators

Three indictors LEDs; Red, green, and Blue are utilized for various conditions:

- Red LED: High water level (potential flood)
- Green LED: Normal water level
- Blue LED: Low water level

3.3Circuit Diagram and Connections

3.3.1 Arduino Uno Connections

Digital Pins:

- **HC-SR04 Trigger:** Digital Pin 7
- **HC-SR04 Echo:** Digital Pin 8
- **Red LED:** Digital Pin 2
- **Green LED:** Digital Pin 3
- **Yellow LED:** Digital Pin 4

Analog Pins:

- **Rain Sensor:** Analog Pin A0
- **Water Flow Sensor:** Digital Pin 9 (interrupt pin)
- **DHT11 Data**: Digital Pin 6

LCD Display:

- **RS:** Digital Pin 12
- **EN**: Digital Pin 11

© Computer Science Department

- **D4:** Digital Pin 5
- **D5:** Digital Pin 4
- **D6:** Digital Pin 3
- **D7:** Digital Pin 2

3.3.2 Power Connections

All sensors and the LCD display are powered through the 5V and GND pins of the Arduino Uno.

3.3.3 Breadboard

A breadboard is a temporary way in which the connections of all of the components as well as the Arduino Uno are made to simplify the soldering of the components.

3.4 Circuit Diagram Explanation

The circuit diagram shows the interconnections between the Arduino Uno and various sensors. Each sensor is connected to specific pins on the Arduino as described in section 3.3. Power is supplied from the Arduino to all components through the breadboard. The LCD display provides real-time data feedback, while the LEDs indicate different water level conditions.

© Computer Science Department

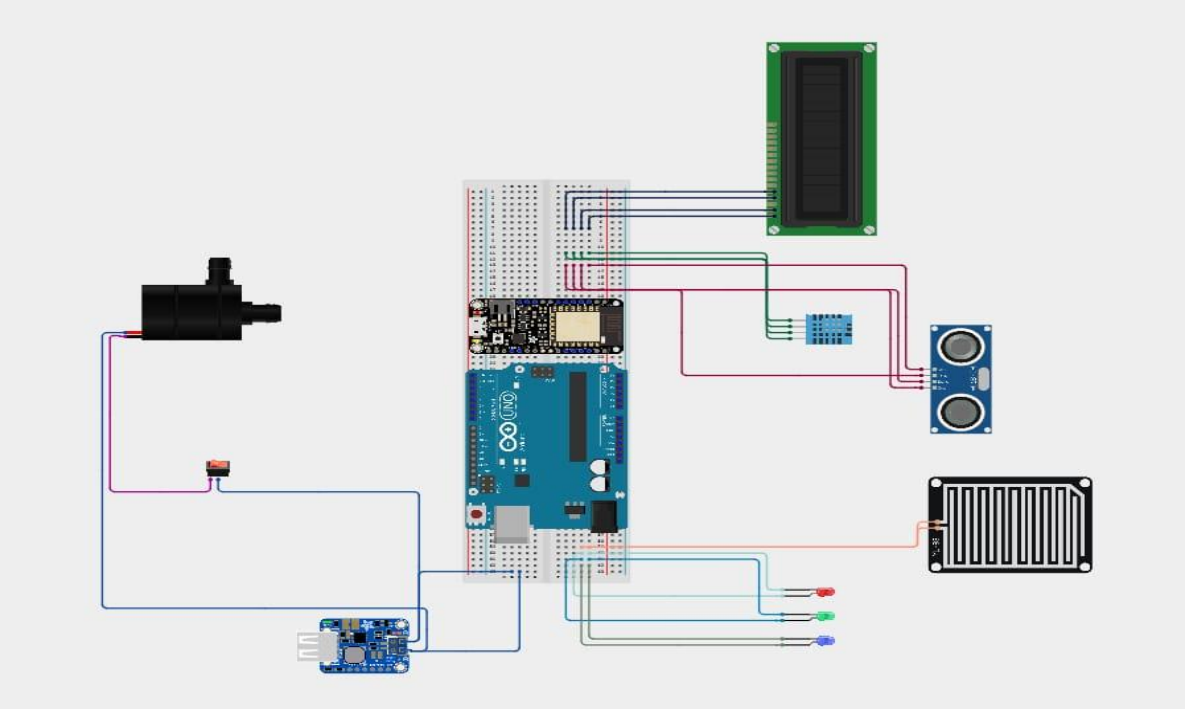

3.5 Working Principles

- **Sensor Deployment**: Strategic placement of IoT sensors (e.g., water level sensors, rain gauges) in flood-prone areas to collect real-time data on water levels, rainfall intensity, and weather conditions.
- **Real-time Data Transmission**: Continuous wireless transmission of sensor data via technologies like Wi-Fi, cellular networks, or LPWAN ensures timely updates on flood conditions to a central server or cloud platform.
- **Data Analytics and Prediction**: Advanced data analytics and predictive modeling algorithms analyze incoming data to forecast flood risks, detect anomalies, and generate timely alerts for preemptive action.
- **Multi-channel Alerting**: Instantaneous dissemination of flood alerts through multiple communication channels (e.g., mobile apps, SMS, sirens) to warn authorities, emergency responders, and affected communities.
- **Integration with Emergency Response**: Seamless integration with local emergency response systems enables automated triggers for flood mitigation measures such as closing floodgates, activating pumps, and managing evacuation routes.

© Computer Science Department

3.6 Coding the Arduino

The Arduino is programmed for **"Smart Flood Monitoring and Alarming System"**accordingly. Below is a simplified version of the Arduino code for such a system:

Code:

```
#define BLYNK_TEMPLATE_ID "TMPL60psXM6si"
#define BLYNK_TEMPLATE_NAME "IOT Flood Monitoring System"
#define BLYNK_AUTH_TOKEN "_ZOCHRoqF6Y7ColgSdT4sbASFtM9T1IR"

#include <LiquidCrystal_I2C.h>
#define BLYNK_PRINT Serial
#include <ESP8266WiFi.h>
#include <DHT.h>
#include <BlynkSimpleEsp8266.h>

LiquidCrystal_I2C lcd(0x27, 16,2);

char auth[] = BLYNK_AUTH_TOKEN;//Enter your Auth token

char ssid[] = "ESP8266";//Enter your WIFI name
char pass[] = "78612345";//Enter your WIFI password

DHT dht(D5, DHT11);
BlynkTimer timer;
```


© Computer Science Department

```
const int trigPin = 13;    // pin no. 13 is D7 ESP8266
const int echoPin = 15;



#define rain_S  A0
#define buzer  D0  //D1
#define Led_G  D6  //D2
#define Led_Y  D3
#define Led_R  D4

long duration;
int dist;
int rain;

void setup()
{
 Serial.begin(9600);

 Blynk.begin(auth, ssid, pass, "blynk.cloud", 80);
 dht.begin();

 pinMode(rain,INPUT);
 pinMode(trigPin, OUTPUT); // Sets the trigPin as an Output
 pinMode(echoPin, INPUT);

 pinMode(buzer, OUTPUT);
```


© Computer Science Department

```
 pinMode(Led_G, OUTPUT);
 pinMode(Led_Y, OUTPUT);
 pinMode(Led_R, OUTPUT);

 digitalWrite(buzer, LOW);
 digitalWrite(Led_G, LOW);
 digitalWrite(Led_Y, LOW);
 digitalWrite(Led_R, LOW);

 lcd.init();
 lcd.backlight();
 lcd.clear();
 lcd.setCursor(0, 0);
 lcd.print("   IOT Flood   ");
 lcd.setCursor(0, 1);
 lcd.print("Monitor System ");
 delay(4000);
 lcd.clear();

 timer.setInterval(100L, DHT11sensor);
 timer.setInterval(100L, Watersensor);
 timer.setInterval(100L, rainSensor);
}

void DHT11sensor() {
  float h = dht.readHumidity();
  float t = dht.readTemperature();
```


© Computer Science Department

```
  if (isnan(h) || isnan(t)) {
    Serial.println("Failed to read from DHT sensor!");
    return;
  }

  Serial.println(t);
  Serial.println(h);
  Blynk.virtualWrite(V2, t);
  Blynk.virtualWrite(V3, h);

  lcd.setCursor(0, 1);
  lcd.print("T:");
  lcd.print(t);

  lcd.setCursor(8, 1);
  lcd.print("H:");
  lcd.print(h);
}


void Watersensor() {
digitalWrite(trigPin, LOW);
delayMicroseconds(2);
// Sets the trigPin on HIGH state for 10 micro seconds
digitalWrite(trigPin, HIGH);
delayMicroseconds(10);
```


© Computer Science Department

```
digitalWrite(trigPin, LOW);
// Reads the echoPin, returns the sound wave travel time in microseconds
duration = pulseIn(echoPin, HIGH);
// Calculating the distance
dist= duration*0.034/2;
Serial.print("Distance= ");
Serial.println(dist);

lcd.setCursor(0, 0);
lcd.print("Water Level:");
lcd.print(dist);

if(dist>20)
{
  digitalWrite(Led_G, LOW); //off
  digitalWrite(Led_Y, LOW);
  digitalWrite(Led_R, LOW);
}
else if(dist>18 && dist<20)
{
  digitalWrite(Led_G, HIGH);
  digitalWrite(Led_Y, LOW);
  digitalWrite(Led_R, LOW);
}
else if(dist>12 && dist<18)
{
  digitalWrite(Led_G, HIGH);
```


© Computer Science Department

```
  digitalWrite(Led_Y, HIGH);
  digitalWrite(Led_R, LOW);
}
else if(dist<12)
{
  digitalWrite(Led_G, LOW);
  digitalWrite(Led_Y, LOW);
  digitalWrite(Led_R, HIGH);
  Blynk.logEvent("flood_alert","Emergency Alert...! water level Over Flow flood alert ");
}

Blynk.virtualWrite(V0, dist);

}

void rainSensor() {

  rain = analogRead(rain_S);
  rain= 100 - rain /10.24;
  Serial.println(rain);

  if(rain>50)
  {
   digitalWrite(buzer, HIGH);
   Blynk.logEvent("rain_alert","Emergency Alert..! Rain Detected");
  }
   else{digitalWrite(buzer, LOW);}
```


© Computer Science Department

```
  Blynk.virtualWrite(V1, rain);
}



void loop ()
{
  Blynk.run();
  timer.run();
}
```

3.7 Safety Considerations

- Properly isolate components that handle high and low voltages to avoid electrical dangers.
- **Power Ratings:** Use relays and power supplies that can handle the current and voltage ratings of the connected devices.

3.8 Conclusion

This chapter provided an overview of the system components, circuit design, working principles, and coding necessary to implement such a system. With continuous advancements in technology, the integration of "**Smart Flood monitoring and Alarming system"**

© Computer Science Department

Chapter#4

INTERFACE

4.1 Introduction

More recently, IoT based flood monitoring and management systems have gained much prominence in flood mitigation solutions. When it comes to choosing a cloud-based platform for creating human-friendly interfaces, Blynk can be credited for having one of the best and most flexible interfaces. In this chapter, the authors discuss how smart flood monitoring and alarming system interface can be implemented using Blynk; this chapter also highlights the main features of the application, and the conveniences resulting from its application.

4.2 Smart Flood Monitoring using Blynk Interface

Blynk is an IoT platform that enable designers to create interface for connected device that does not require complex coding skills. It enables the creation of mobile apps and other control and monitoring dashboards which also include real-time data display. In case of flood monitoring systems, Blynk ensures that the concerned stakeholders can view the fundamental flood data, receive alerts and control the response measures with the easy to use interface.

4.3 Design Features

The design of the Blynk interface for a Smart flood monitoring and alarming system entails the consideration of the following principles to achieve usability, functionality, and effectiveness:

- **Real-time Data Visualization:** With the help of Blynk it is possible to create the interactive panels which will show the parameters of the sensors such as the water level, intensity of the rain and other climate conditions. The everyday use of figures, rates, and other graphics combined with giving an outlook on gauges or maps enables stakeholders to understand the transient processes behind floods.
- **Alert and Notification Systems:** The interface contains options for localizing the means of informing stakeholders about crucial flood occurrences. They can also be set to send notification using the devices of mobile, email or SMS when parameters such as the water levels exceed the set limit.

© Computer Science Department

- **Remote Monitoring and Control:** It also provided various stakeholders with a chance to supervise and control IoT devices installed in the flood vulnerable regions through the Blynk interface. From the data gathered by the sensors, this functionality enables the alteration of the position of flood barriers or the management of pumps or other forms of emergency response.
- **User Accessibility:** The opposed sides of Blynk interfaces are created to be compatible with such gadgets as smartphones, tablets, and desktops. This guarantees that important flood data is available for use at any time by the stakeholders hence enhancing prompt decision making and response actions.

4.4 Blynk Monitoring Interface

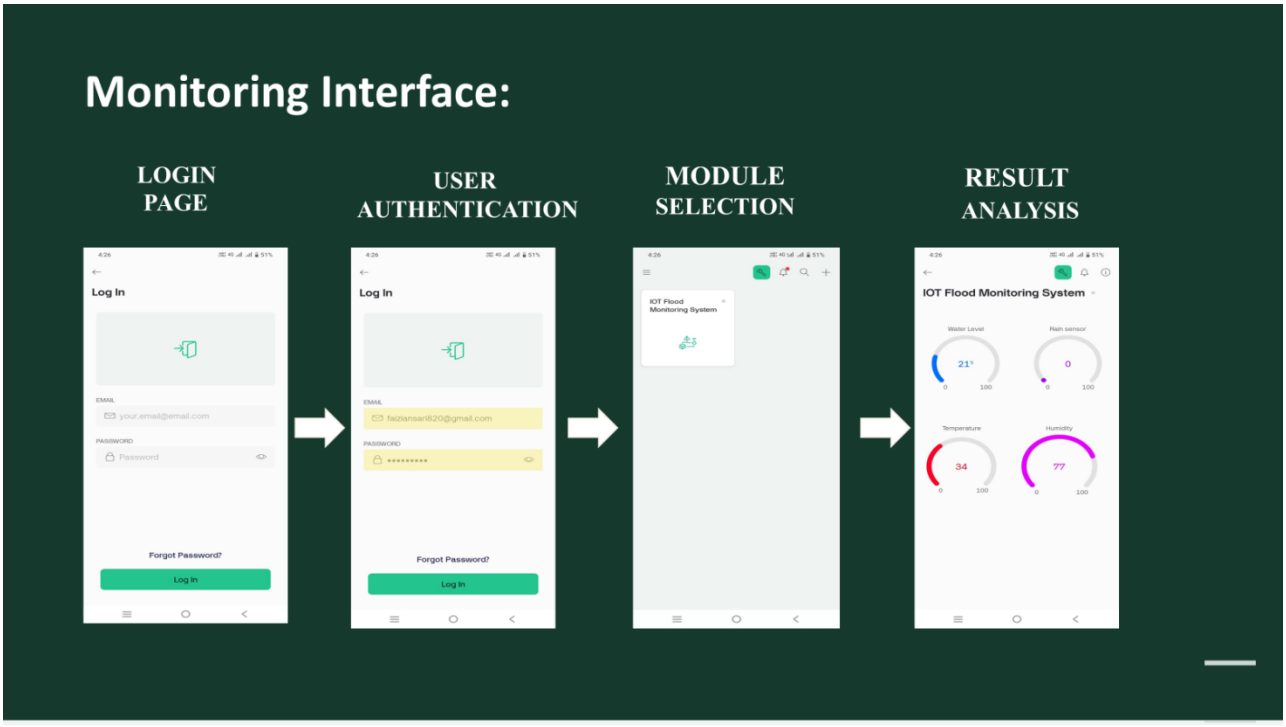

© Computer Science Department

4.5 Overview of the Interface

The interface in question is designed for simplicity and efficiency, allowing users to easily monitor and control the state of Flood Monitoring System . It consists of a series of screens that display the status of each indicators.

Login Screen:

- **Email and Password Fields:** Users enter their email and password to access the interface.
- **Log in Button:** After entering the credentials, users tap the "Log In" button to proceed.
- **Forgot Password Link:** A link for users who need to recover their password.

Home Screen:

Project Card: Displays the current project **" IOT Flood Monitoring and Alarming System**" with an icon representing home automation.

Result Analysis Screen:

- **Different Modules:** Four modules used in this phase. Modules Name(water level,Rain Fall,Temperature and Humidity.
- **Red color:** Give the value of temperature(Temperature sensor)
- **Purple color:**Give the value of water level(ultrasonic sensor)
- **Pink color:**Give the value of Rain and Humidity sensor(Rain fall &Humidity sensor)

4.6 Detailed Interface Description

Login Screen:

The login screen is the entry point for users. It ensures that only authorized individuals can access the home automation controls. The design is straightforward, featuring fields for email and password, and a prominent login button. The "Forgot Password" option is available for user convenience.

Home Screen:

© Computer Science Department

Once logged in, users are taken to the home screen, which serves as a dashboard for the IoT project. It provides a quick overview and access point to the main monitoring interface.

Result Analysis Screen:

The core of the application is Result Analysis Screen,where users can see the real-time status of Water level/Temperature/Humidity/rain level .

© Computer Science Department

Chapter#5

Conclusion and Future Scope

5.1 Conclusion

The development of the Smart Flood Monitoring and Alarming System using IoT represents a significant advancement in mitigating the risks associated with flooding through real-time monitoring and early warning mechanisms. Throughout this project, several key objectives were achieved, contributing to its overall success:

1. **Effective Flood Monitoring:** The use of IoT sensors made it possible for regular recording of water levels, rainfall rates and other related conditions of the flooded regions.
2. **Timely Alerts and Notifications:** The timely processing of data and alert to authorities and residents through the system has highly contributed to minimizing the disasters' impacts especially flooding.
3. **User-Friendly Interface:** The use of friendly graphical user interface interfaces makes it possible to enable quick access to information required to enable users to make the right decision at the right time during the flood incidences.
4. **Scalability and Integration:** Scalability is of a high level, so it is possible to expand the present system for including new sensors and features to improve its reach and efficiency in the future.
5. **Security and Reliability:** Safeguards in security make sure that data is protected and it has high levels of privacy so as to prevent instabilities between companies or institutions and their stakeholders.

© Computer Science Department

5.2 Future Scope

Although the chance to counter flood-disasters by the Smart Flood Monitoring and Alarming System using IoT has just begun showing its basic potentials the following are few areas of improvement and future work that can be made for further advancement and broadening :

1. **Enhanced Sensor Capabilities:** Enhance the capability of the sensors for measuring other parameters such as quality of water, presence of debris/pollutants and weather conditions to enhance on the prediction accuracy.
2. **Machine Learning and Predictive Analytics:** Automate data analysis and usage of big data by applying machine learning algorithms on historical data to calculate the possible future patterns of floods and thus provide possibilities of preventive measures rather than emergent ones.
3. **Community Engagement:** Design a way in which the communities can input data (for example flood reports, pictures); this should also include a way through which the residents receive alerts based on the areas they represent.
4. **Integration with Smart Infrastructure:** Work with urban planners on how to incorporate the information on floods into the smart city management systems for drawing appropriate responses including changing traffic patterns and installing barriers for floods.
5. **IoT and Edge Computing**: Investigate edge computing options to perform the data analysis nearer to the sources (e. g. , sensors) that gather the data in order to save valuable time during the critical periods of flood occurrences.
6. **International Collaboration:** Engage foreign institutions and scholars to take advantage of floods data bases and international flood control policies and strategies.
7. **Environmental Monitoring:** Enhance functionality of the system in monitoring of environment conditions other than flood like air quality and temperature, which would help in overall disaster management programme.

© Computer Science Department

APPENDIX A:REFERENCES

1. **EEA (European Environment Agency). (2017).** *Climate Change, Impacts and Vulnerability in Europe 2016: An Indicator-Based Report*. Retrieved from

   https://www.eea.europa.eu/publications/climate-change-impacts-and-vulnerability-2016

2. **OAS (Organization of American States). (2016).** Guidelines on the Development of National Early Warning Systems. Retrieved from

   https://www.oas.org/en/cdmp/inter-american-system/guidelines-on-the-development-of national-early-warning-systems.asp

3. **NEP (United Nations Environment Programme). (2018).** *Adaptation Gap Report 2018*. Retrieved from

   https://www.unep.org/resources/report/adaptation-gap-report-2018

4. **UNISDR (United Nations Office for Disaster Risk Reduction). (2013).** *Flood Early Warning Systems: A Review of Benefits, Challenges and Opportunities*. Retrieved from

   https://www.preventionweb.net/publications/view/32492

5. **EFAS (European Flood Awareness System). (2022).** *EFAS - European Flood Awareness System*. Retrieved from

   https://www.efas.eu/

6. **National Weather Service (NWS)**: Flood Monitoring and Alerts. Retrieved from

   https://www.weather.gov/

7. **International Federation of Red Cross and Red Crescent Societies (IFRC)**: Early Warning Systems. Retrieved from

   https://www.ifrc.org/

© Computer Science Department

8. **World Meteorological Organization (WMO)**: Flood Forecasting and Early Warning Systems. Retrieved from

   https://public.wmo.int/

9. **United Nations Development Programme (UNDP)**: Disaster Risk Reduction and IoT. Retrieved from

   https://www.undp.org/

10. **Environmental Protection Agency (EPA)**: Climate Change and Flood Resilience. Retrieved from

   https://www.epa.gov/

© Computer Science Department